EERC
Energy & Environmental Research Center

UNIVERSITY OF NORTH DAKOTA
15 North 23rd Street — Stop 9018 / Grand Forks, ND 58202-9018 / Phone: (701) 777-5000 Fax: 777-5181
Web Site: www.undeerc.org

January 28, 2010

Mr. Timothy Edman
Manager, Regulatory Administration
Xcel Energy, Inc.
414 Nicollet Mall
Minneapolis, MN 55401

Dear Mr. Edman:

Subject: Quarterly Progress Report Entitled "Indirect Liquefaction of Wood Waste for Remote Power Generation Fuel"; Contract No. RD3-66; EERC Fund 9968

Enclosed please find the subject report. If you have any questions, please contact me by phone at (701) 777-5159 or by e-mail at jhurley@undeerc.org.

Sincerely,

John Hurley

John P. Hurley
Senior Research Advisor

JPH/kal

Enclosure

Energy & Environmental Research Center University of North Dakota
15 North 23rd Street, Stop 9018
Grand Forks, ND 58202-9018

Project Title: Indirect Liquefaction of Wood Waste for Remote Power Generation Fuel

Contract Number: RD3-66 Milestone Number: 4 Report Date: January 27, 2010

Principal Investigator: John Hurley (701) 777-5159
Contract Contact: Tobe Larson (701) 777-5271

Congressional District: Not Applicable

Congressional District: Not Applicable

MILESTONE REPORT

Executive Summary

During this milestone period, a used curtain-sided, dropped-deck trailer that will serve as the mobile platform for the indirect biomass liquefaction system was purchased and transported to the Energy & Environmental Research Center (EERC).

Also, during this reporting period, parametric testing of methanol catalyst performance continued. The testing is necessary because the commercial catalyst is designed for creating methanol from a synthesis gas stream made from natural gas that has a much higher hydrogen content than simulated biomass syngas, which will be created in this program. Tests were performed to determine the effects of carbon dioxide concentration in order to determine whether or not a water–gas shift reactor, which would increase hydrogen and carbon dioxide concentrations in the syngas, would be helpful to increase methanol production efficiency. The tests indicate that the inclusion of a water–gas shift (WGS) reactor in the system would not be sufficiently beneficial to justify its cost. In addition, tests of the temperature dependence of conversion efficiency were performed in order to determine optimal operating temperatures and enable us to finalize the design of the gas-to-liquids conversion reactor. Based on the results of those tests, initial designs of the full-scale conversion reactor were completed. A laser gas analyzer was also purchased during this reporting period, partially from RD3-66 funds, to aid in the laboratory tests and also so that it could be used during the field demonstrations to track syngas compositions and gas-to-liquids conversion efficiencies.

As reported previously, a new type of small gasifier technology is being developed and tested at the EERC under funding separate from the Xcel Energy RD3-66 program. The system is designed to handle high-volatile fuels but should also be able to handle the very wet, or green, wood that is one of the unique objectives of the gasification technology being tested under RD3-66. One advantage of the new gasifier is that it is much more easily scaled up in size for situations where a system larger than one that can be mounted on a trailer is required. Also, its throughput can be much higher than with the originally proposed thermally integrated system, allowing a higher overall system productivity. During the last reporting period, we used a portion

of the program funds to pay for a test of the pilot-scale system with wet wood chips collected from the proposed field demonstration site. The main goals of the test were to determine if, in fact, the new gasifier design can gasify wet wood and, if so, to determine the maximum fuel feed and gas production rates as well as levels of contaminants in the product gas. Overall, the testing confirmed that the new gasifier design was well-suited to the gasification of wet wood waste and will have a much higher throughput than the originally proposed thermally integrated gasifier. The high throughput translates into a higher liquid production rate for essentially the same amount of labor and capital cost. During this reporting period, the results of the tests were translated into a nearly finalized gasifier and gas cleanup system design for the mobile indirect liquefaction system. Finally, the subcontract with the University of Minnesota – Duluth (UMD) for its work in the program was fully executed during this reporting period.

Technical Progress

Trailer Purchase: A curtain-sided, dropped-deck trailer has been purchased for use as the mobile platform for the project. This trailer, seen in Figure 1, has an aluminum roof with curtain sides that can be rolled back for ease of loading or running equipment. Outrigger attachments will be installed to create a stable and vibration-free platform for the compressor to operate on.

The floor of this type of trailer drops down to the rear of the hitch to provide an extra 1–2 feet of internal height.

Subcontract Status: The subcontract with UMD for its work in the program was fully executed during this reporting period.

Figure 1. Curtain-sided, dropped-deck trailer, purchased during this reporting period, to house the mobile indirect liquefaction system.

Gas-to-Liquids Conversion:

High-CO_2-Concentration Experiment. Results from the designed experiment completed last quarter indicated that the temperature and partial pressure of hydrogen were the most significant factors affecting methanol production. However, gasifier trials showed that the concentration of CO_2 will likely exceed the upper limit of 12% tested in that experiment, so a follow-up three-factor designed experiment was carried out, with the factors and ranges specified in Table 1. The upper limit of CO_2 in this design is 29%. Since temperature dominated the results of the previous experiment and, possibly, caused excessive catalyst deactivation, it was removed from the design and set at the optimum temperature of 220°C. Nitrogen had no effect on the results, so it was excluded from the design and set at a partial pressure of 100 psi. Table 2 shows the 3-factor factorial design of eight runs with three center points, along with dependent variables and the results of methanol production rates.

A fresh batch of catalyst was loaded into the reactor system prior to this experiment, and the center points were strategically placed at the beginning, middle, and end of the design to gauge catalyst deactivation. Catalyst deactivation appeared to be nearly negligible. Unsurprisingly, the partial pressure of hydrogen (X1) was the most statistically significant factor, but this time, the partial pressure of carbon monoxide (X2) and carbon dioxide (X3) were also significant. However, their effects on the production of methanol were one-third that of hydrogen (Figure 2). Interactions between variables were insignificant. Increasing the partial pressure of hydrogen and carbon monoxide increases the production rate of methanol, but CO_2 has a negative effect and, therefore, increasing partial pressure will decrease the rate of methanol production.

WGS Reactor Benefit Analysis. Since the partial pressure of hydrogen has a comparatively large effect on the production rate of methanol, an analysis on the benefit of including a WGS reactor prior to the methanol reactor was conducted. The latest syngas composition results from the gasifier are given in Table 3. If half of the carbon monoxide reacts with water via the WGS reaction, then additional hydrogen and carbon dioxide are formed, and the modified syngas composition is given in Table 3. From the experimental design described in the previous section, the following prediction model was used to estimate the production rate of methanol. Total pressure was arbitrarily assumed to be 560 psi.

$$\text{MeOH Production Rate (g/hr)} = 20.6 + 6.16*(H_2\ PP) + 1.98*(CO\ PP) - 1.88*(CO_2\ PP)$$

The modified syngas composition with higher hydrogen content only marginally increases the production of methanol by 6.7%. This is due to the fact that CO composition decreases and

Table 1. Factor List with Coded Settings

Factor	–1	0	1
X1: H_2 PP, psi	100	137.5	175
X2: CO PP, psi	50	75	100
X3: CO_2 PP, psi	50	75	100

Table 2. Three-Factor Factorial Design with Center Points

Run Order	Trial	Coded Design X1	X2	X3	Dependent Variables Pressure, psi	CO, %	N_2, %	H_2, %	CO_2, %	MeOH Production, g/hr
7	1	–1	–1	–1	300	17	33	33	17	15.7
2	2	1	–1	–1	375	13	27	47	13	27.0
8	3	–1	1	–1	350	29	29	29	14	15.9
3	4	1	1	–1	425	24	24	41	12	31.5
9	5	–1	–1	1	350	14	29	29	29	11.2
10	6	1	–1	1	425	12	24	41	24	20.7
4	7	–1	1	1	400	25	25	25	25	15.2
6	8	1	1	1	475	21	21	37	21	28.0
1	9	0	0	0	387.5	19	26	35	19	18.8
5	10	0	0	0	387.5	19	26	35	19	17.5
11	11	0	0	0	387.5	19	26	35	19	18.3

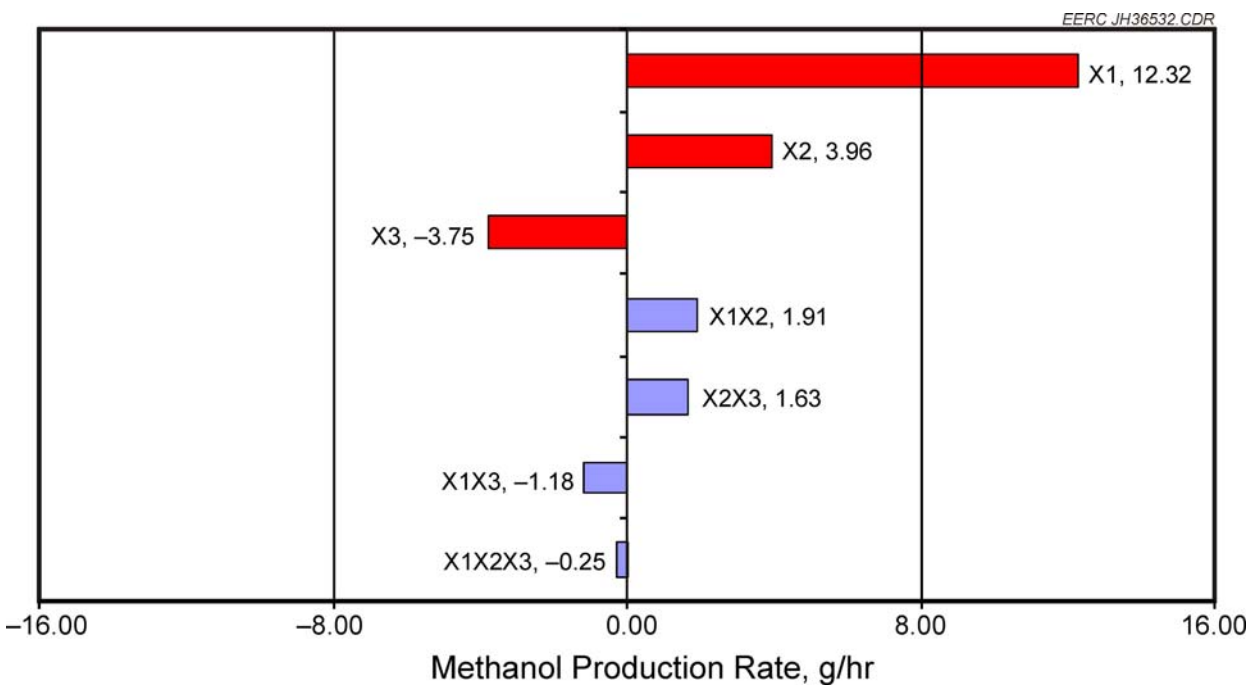

Figure 2. Pareto chart of factor effects on methanol production (red bars indicate statistically significant variables).

Table 3. Estimated Syngas Compositions Before and After WGS

	Before WGS	After WGS
H_2, mol%	15.2	21.2
CO, mol%	11.2	5.3
CO_2, mol%	14.7	20
N_2, mol%	53.6	53.5
H_2O, mol%	5.3	0
MeOH Rate, g/hr	10.5	11.2

CO_2 composition increases, both of which will have a negative effect on the production rate of methanol. This nearly cancels the positive effect of increasing hydrogen composition in the syngas. The expense of adding another reactor for WGS to build, operate, and maintain will negate the marginal improvement in methanol production and thus will not be included in the methanol reactor system.

Low-Temperature Test. In the first designed experiment, which included temperature as a variable, the optimum temperature for the reaction had not yet been discovered, as methanol production appeared to increase linearly as temperature decreased to the end of the experimental window. A follow-on test was conducted to determine reaction rates at temperatures below 220°C. A trial from a past experiment was replicated with the same syngas composition and pressure, but the temperature of the reactor was lowered to 200°C. The production rate of methanol decreased quite dramatically by 50%. No further tests were conducted as it was clear that the optimum reaction temperature was near 220°C.

Methanol Reactor System Design. A basic block diagram of the proposed methanol reactor system is presented in Figure 3. Clean syngas will enter methanol reactor No. 1. The unconverted syngas and reaction products will pass through a heat exchanger and a condenser to cool the stream to near 0°C to condense the methanol into liquid. The methanol will be collected in a tank, and the unconverted syngas will go on through heat exchanger No. 1 to be reheated. A chiller loop of ethylene glycol or other subzero liquid medium will be used drop the temperature of the product gas to 0°C to condense the methanol. Since the carbon monoxide conversion rate per reactor is limited to approximately 25% at low pressures, a second reactor train can be added to improve overall syngas conversion. An ASPEN model of the methanol reactor system was created to determine composition, temperatures, and flow rates of the streams, and also to help determine the specifications of the heat exchangers and liquid pumps.

Preliminary concept designs of the methanol reactor have been discussed. To scale up the lab reactor to the flow rate of 150 scfm of syngas, 122 1-in.-outer diameter tubes, 8 feet long, are required. Figure 4 is a 3-D drawing of what this multitubular reactor may look like. The feed gas will enter the top of the reactor via a distributor cap. The gas will pass through the reactor tubes, and unconverted gas and product will drop out of the bottom of the reactor and collect into a single stream for transport to the heat exchanger. A heat-transfer fluid such as DOWTHERM will enter the top of the jacket surrounding the 122 tubes. The temperature and flow rate of the heat-transfer fluid will be set to maintain an even temperature profile in the reactor.

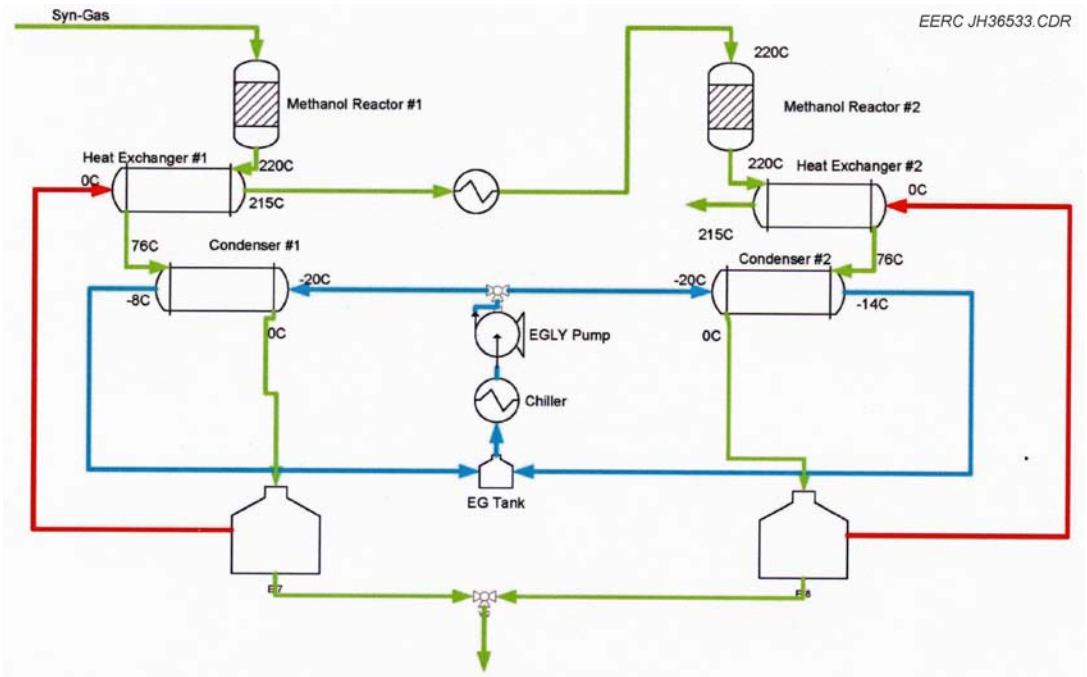

Figure 3. Methanol reactor system block diagram.

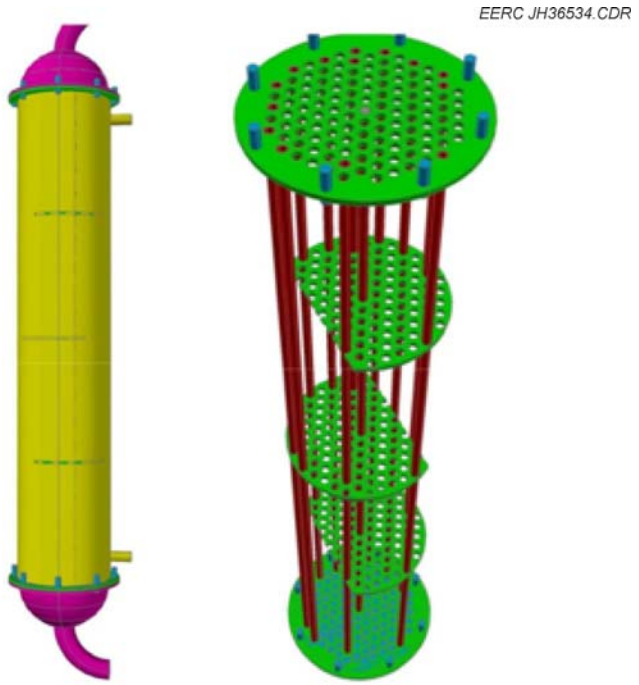

Figure 4. 3-D drawing of multitubular methanol reactor.

The reactor must be able to withstand a temperature of 350°C and pressures up to 1000 psi, which will be expensive to construct. A cost estimate of one of the 18-in. flanges is $7500 alone. The entire cost of the reactor may be in the range of $75,000–$100,000. A cost estimate of building several smaller reactors was determined, and the price was not significantly different when compared to building one large reactor.

For alternative configurations, a cost estimate of a reactor constructed entirely of Swagelok compression fittings would cost approximately $60,000–$70,000. While the price is somewhat less, the sheer number of fittings (approximately 570) would pose a nightmare for finding and eliminating pressure leaks. A company with experience in building reactors commercially was contacted as well. They have a compact reactor configuration, which could reduce the size of the reactor significantly, but the cost is well in excess of $100,000.

Future work includes developing a kinetic model of the methanol and WGS reactions to determine syngas conversion and temperature profiles in the proposed multitubular reactor. The reactor design will be finalized, and construction will begin. The process flow streams and unit operations will be further optimized to maximize heat integration and process efficiencies. Equipment for other unit operations such as pumps and heat exchangers will be specified and purchased.

Laser Gas Analyzer: A laser gas analyzer (LGA) was purchased during this reporting period to be used both in the laboratory and in the field demonstration unit to track gasifier and gas-to-liquids conversion efficiencies. The unit was purchased partially from this project's funds and partially from a Department of Defense-funded project that will use it when it is not required by this project. The LGA, purchased from Atmosphere Recovery Inc.®, is a multigas process analyzer. The gas sample passes through the detector module where a laser light strikes it. A gas species will absorb and reemit the light at a higher or lower frequency, also known as the "Raman shift" frequency (Atmosphere Recovery Inc., 2003). Each gas species to be measured has an optical window that allows a specific frequency to pass through. The intensity of the light received can be correlated to the quantity of the gas species in the sample. Table 4 shows the lower detection limits of several gas species.

Table 4. LGA Lower Detection Limits (Atmosphere Recovery Inc., 2003)

Gas Species	Lower Limit, ppm
Hydrogen, H_2	100
Nitrogen, N_2	50
Oxygen, O_2	50
Water Vapor, H_2O	10–50
Carbon Monoxide, CO	50
Carbon Dioxide, CO_2	25
Organics, C_xH_y	10–50
Ammonia, NH_3	10–50

The LGA system not only measures gas, but is a stand-alone computer system. The system uses the Windows 2000 operating system and has several connection ports, including networking (RJ-45), keyboard, mouse, and video. An onboard logging system writes data to an Excel® spreadsheet. Remote data logging and viewing can be set up by connecting to the OPC (OLE [object linking and embedding] for process control) server supplied with the LGA system.

Remote communication to the mobile indirect liquefaction system is heavily dependent upon the resources (specifically bandwidth and networking capabilities) available at the operation site. Programs such as UltraVNC® and Remote Desktop® allow for remote operation over a network (local or Internet) but require large amounts of bandwidth. If remote control is allowed, security measures to prevent unwanted access and control would be needed. Alternatively, implementing authorized remote viewing-only sessions would present less of a security risk. Different communication methods and protocols (such as Bluetooth® and Ethernet TCP/IP) will be explored to develop a secure and functional communication network, both locally and remotely.

Programming of the indirect liquefaction system will most likely be done with Labview 2009®. Labview is a graphical programming language developed by National Instruments® which has been used on many projects at the EERC. Several subsystems which will be used on the mobile system (such as the LGA, temperature controllers, and pressure controllers) have already been setup to communicate with Labview. An alternative to Labview is to use the expertise of a company called Mondial Electronic®. Currently, Mondial® is supplying a control board and basic control program for the pilot-scale gasifier system. Because of time constraints and a lack of knowledge, it is unlikely that the Mondial system will be used for the first indirect liquefaction system.

Gasifier Design: Based on the results of pilot-scale tests described in the last milestone report, we have nearly completed the design of the advanced gasifier to be used in the mobile indirect biomass liquefaction system. The advanced fixed-bed biomass gasifier is the enabling technology for indirect liquefaction of high-moisture, woody biomass, energy-dense liquid fuels. It is a significant improvement over the originally proposed gasifier in that it can be scaled up much more readily than the original design. The 220-lb/h (100-kg/h) gasifier, rated at about 400 kW thermal, is capable of overcoming challenging requirements of this program. The basic challenges required to be addressed in the gasifier design for the project are as follows:

- Utilization of green or high-moisture feedstock (30% to 40% by weight) for the production of ultraclean hydrogen-rich syngas consisting of low concentration of CO_2 and N_2 diluents.

- Requirement of near-zero effluent discharge. Stringent air emission control and minimal waste disposal requirements are applied because system operation at remote sites lacks normally required infrastructure for waste disposal.

- System capable of mounting on truck for mobile application, resulting in size and weight restrictions as well as special transportation requirements.

- Minimal parasitic load requirement.

- High degree of automation.

The ongoing gasifier design effort is targeted at overcoming these challenges.

The general schematic of the gasifier system is shown in the Figure 5. The EERC advanced fixed-bed gasifier is based on a staged-air gasification process that allows the fuel gasification zone to achieve a long and uniform high temperature such that near 100% carbon conversion is achieved and a high fraction of biomass moisture is utilized in attaining syngas with high H_2/CO and CO/CO_2 ratios. This is critical for the proposed indirect biomass liquefaction system in order to eliminate additional syngas balance processes such as a shift reactor and CO_2 scrubber.

The need for a near-zero effluent discharge system is critical for the proposed system. The process utilizes carbon residue produced in the gasifier in order to clean the scrubber water and maintain a low level of organic contaminants at all time. The water is recirculated in a closed loop, thus reducing its usage. The spent solids are reinjected in the gasifier, thus achieving a closed-loop process, achieving complete destruction of contaminants. The excess water is discharged after meeting local regulations. It is also likely that the cleaned water could be polished and used instead of discharging it. This feature of the gasifier will make it a water factory.

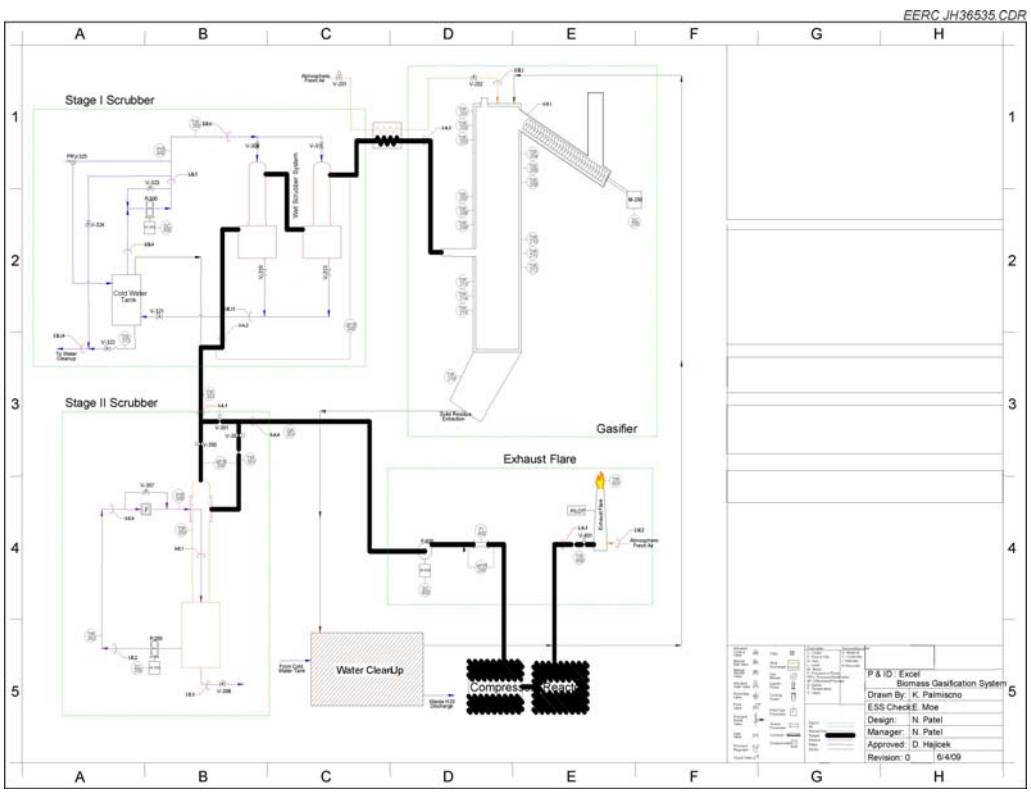

Figure 5. General schematic of the biomass-to-liquid system.

The gasifier design will be capable of achieving seamless integration with the methanol or Fischer–Tropsch (FT) reactor system while utilizing and/or supplying heat for improving the thermodynamic efficiency of the overall process.

Reference:

1. Atmosphere Recovery, Inc. LGA Multi-Gas Process Analyzer Brochure. 2003. www.atmrcv.com/frameset.php?docsrc=templib/brochures/ARI_Features_Brochure.pdf (accessed Jan 2010).

LEGAL NOTICE

THIS REPORT WAS PREPARED AS A RESULT OF WORK SPONSORED BY NSP. IT DOES NOT NECESSARILY REPRESENT THE VIEWS OF NSP, ITS EMPLOYEES, OR THE RENEWABLE DEVELOPMENT FUND BOARD. NSP, ITS EMPLOYEES, CONTRACTORS, AND SUBCONTRACTORS MAKE NO WARRANTY, EXPRESS OR IMPLIED, AND ASSUME NO LEGAL LIABILITY FOR THE INFORMATION IN THIS REPORT; NOR DOES ANY PARTY REPRESENT THAT THE USE OF THIS INFORMATION WILL NOT INFRINGE UPON PRIVATELY OWNED RIGHTS. THIS REPORT HAS NOT BEEN APPROVED OR DISAPPROVED BY NSP NOR HAS NSP PASSED UPON THE ACCURACY OR ADEQUACY OF THE INFORMATION IN THIS REPORT.